A DESIGNER' S GUIDE TO ROTATIONAL MOLDING

Pan-European Rotomoulding Conference

Brussels. Belgium -November 17th -IBth. 2000

ROTATIONAL MOLDING can be defined as a high-temperature, low-pressure, open- mold, intermittent, manufacturing pro- cess that uses heat and biaxial rotation to produce hollow, one-piece plastic parts.

To rotationally mold a product such as a roll-out refuse container, a mold that defines the shape of the part to be produced is mounted on the arm of a molding machine (Fig. 1). This machine is capable of biaxially rotating and moving the mold through the four phases of the process.

To perform this process a predetermined amount of plastic material, in the form of a liquid or a powder, is loaded into the mold's cavity. The machine then simultaneously rotates the mold in two directions and moves the mold into the heating chamber. The mold is heated and all the plastic material adheres to the inside surface of the cavity. While it continues to rotate, the machine moves the mold out of the heating chamber and into the cooling chamber, where the plastic is cooled to the point that the formed plastic part will retain its shape. The machine then moves the mold to the open station, and the mold stops rotating. The mold can then be opened and the molded part removed. The mold is then recharged with plastic mat erial and the process can be repeated.

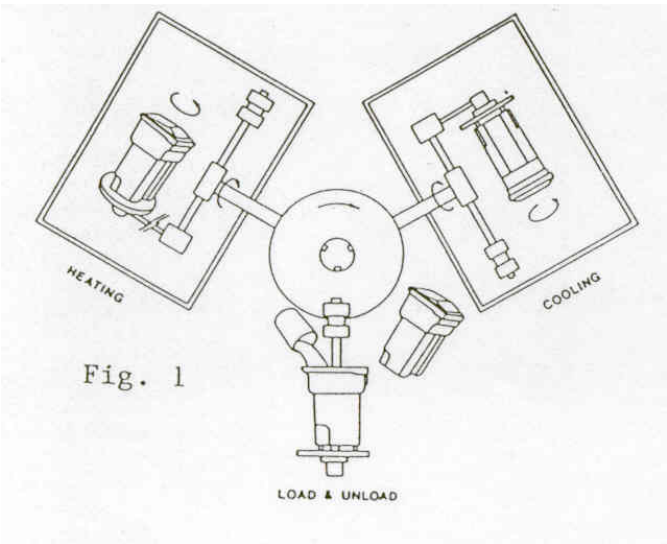

Fig. 1

This process differs from other thermoplastic processes in that both the plastic material and the mold must be heated and then cooled during each molding cycle. This situation has resulted in the development of thin walled, shell molds where the outside of the mold duplicates the shape of the cavity (Fig. 2). There are no forces on the plastic material to push or pull it into contact with the cavity. In the rotational molding process, the material remains as a puddle or pool of plastic in the bottom of the cavity (Fig. 2).

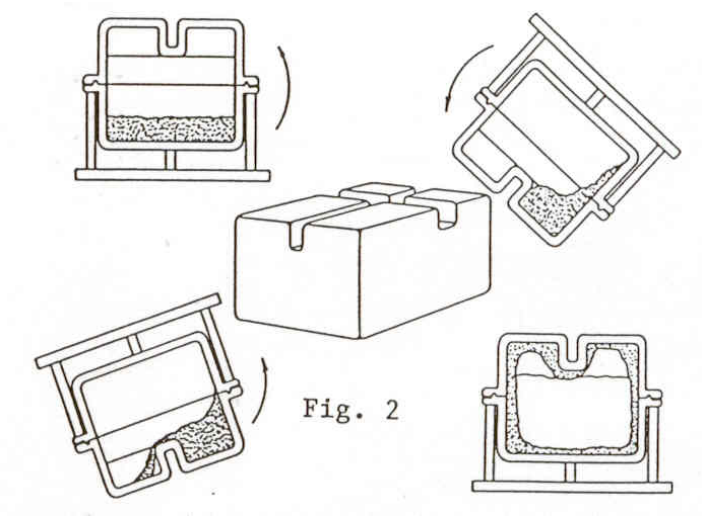

Fig. 2

As the machine rotates the mold through two axes, all surfaces of the cavity repeatedly pass through the puddle of plastic material. Molding is actually achieved by the powdered or liquid plastic material adhering to, or sintering onto, the cavity. In order for this process to work in the absence of pressure, the parts to be produced must be designed to provide easy access of the plastic material to all surfaces of the cavity. This is a requirement that is often overlooked by inexperienced designers.

DESIGN CONSIDERATIONS: The designing of a new plastic product to be produced by the rotational molding process is the same as designing a product for any other materials and processes. This procedure can be broken down into two distinctly different functions, which are product design and part design. These two types of design are of equal importance, but the process starts with product design.

Product design is the creative part of the development process. This work takes many forms, but it should start with the development of a clear understanding of the functional requirements of the product in its end-use environment. The designer then thinks about the product and starts sketching or experimenting with different shapes, searching for a structure that will satisfy the functional requirement of the product. If the required product were a roll-out refuse container, the designer might evolve a structure similar to that shown in Fig. 3.

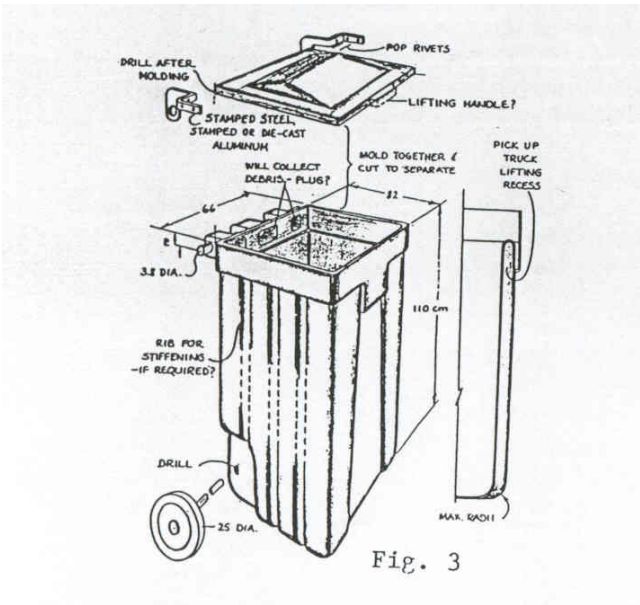

Fig. 3

In general. experienced designers do an excellent job of creating plastic products. This is fortunate. as manufacturers can only produce what engineers design. The unprecedented growth of the plastics industry is due in no small part to the product design community's early acceptance of plastic materials and the impressive products that designers have created.

Once the designer has evolved an acceptable concept, it is then possible to determine the size and shape of the product. The designer can then select a plastic material and a process that is capable of producing the required shape in the chosen material. Refuse containers have been successfully produced in different plastic materials by processes such as injection molding, thermoforming, blow molding and injection molded structural foam. Each of these processes has its advantages and limitations. Selecting the ideal process and material combination is important from both a technical and financial point of view.

Piece part design bridges the gap between product design and the release of the new product for production. Years of experience with different processes and materials has resulted in the establishment of part design guidelines for each combination of material and process. The part design for an injection molded, polypropylene (PP) refuse container would be different than that used to produce the same part by blow molding PP. A rotationally molded polyethylene (PE) refuse container would be different from either of these. With the rotational molding process, a hot cavity passes through a pool of plastic to

coat the cavity. This cavity-coating process imposes limitations on what can and cannot be produced. This process is at its best producing hollow shapes with smoothly blended contours. For example, the ideal shape for a rotationally molded stiffening rib is as shown in Fig. 4B. A single-walled rib (Fig. 4A) is a good shape for processes such as injection, compression or structural foam molding, but it is a difficult shape to produce by the rotational molding process. In the final analysis, the best part design is the one that adapts to the limitations of a process and does not exceed its capabilities.

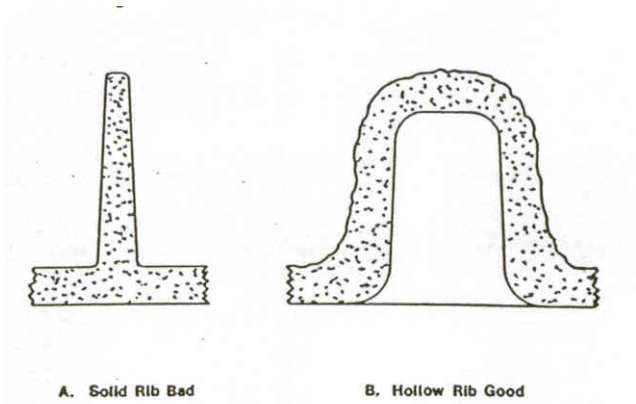

Fig. 4

Taken as a whole, the refuse container (Fig. 3) could be considered to be a complex structure. This product can, however, be simplified by breaking it down into its individual parts, which are the container, the lid, the hinge plates and the wheels. Each of these individual parts can be further subdivided into individual design details. The most complex part in this assembly is the container. This part is, however, nothing more than five flat plates connected together with radiuses at the corners, plus the handles and the pick-up truck lifting recess. Each of these design details have their own individual design guidelines. If each of these relatively simple details are correctly proportioned, the whole part will be properly designed.

By following the established design guidelines, it is possible for both experienced and novice designers to produce an acceptable part design. Proper piece part design is important, as it is these individual drawings that the mold maker will use to construct the cavity that will produce the required parts. The molded part can only be as good as the cavity, which cannot be better than the part drawing.

The thickness of a rotationally molded part is dictated by two considerations. The thickness must provide for the functional requirements, while accommodating the molding requirements. The ideal wall thickness is the thinnest wall that will provide for both of these requirements. Thickness has a direct effect on cost. The minimum allowable thickness is determined by strength requirements and the material's ability to uniformly coat the cavity. The wall thicknesses that are suitable for the commonly molded materials are shown in Table 1.

Table 1 Recommended Wall Thickness for Commonly Molded Materials

	Ideal		Possible	
Plastic Material	Min. mm	Max. mm	Min. mm	Max. mm
PE	1.50	12.70	0.50	50.80
PP	1.50	6.40	0.75	10.16
PVC	1.50	10.16	0.25	25.40
Nylon	2.50	20.32	1.50	31.75
PC	2.00	10.16	1.50	12.70

One of the advantages of rotational molding is that once the mold has been built, it can be used to produce parts with thicker and thinner walls without mold changes by simply charging the mold with more or less material. The optimum wall thickness can then be established by testing the actual part. These tests are always more reliable than strength calculation or speculation. There are few other processes that provide the designer with this capability.

Warpage: During the cooling portion of the molding process, the plastic material shrinks. Shrinkage of these hollow parts allows them to pull away from the cavity before the material has cooled enough to be strong enough to retain its shape. This allows large, flat surfaces to warp. The industry-established standards for warpage are shown in Table 2.

Table 2 Flat-Panel Warpage Standards for Commonly Molded Materials (in ±cm/cm and in./in.)

Plastic Material	Ideal	Commercial	Precision
PE	0.050	0.020	0.010
PP	0.050	0.020	0.010
PVC	0.050	0.020	0.010
Nylon	0.010	0.005	0.003
PC	0.010	0.005	0.003

Ideal = No extra care required; Commercial = Requires special care; Precision = Available at added cost.

A simple approach to discouraging the warpage of large, flat surfaces is to avoid designs of that type. If flat surfaces cannot be eliminated, they can be strengthened to resist warpage with the use of ribs, steps, crowns and domes. A dome as small as 0.015 cm/cm is enough to discourage warpage, but the larger the doming or crowning, the less warpage there will be. Highly polished flat surfaces reflect light and exaggerate the appearance of a warped surface. Textured surfaces help disguise minor warpage.

Parallel walls: Rotational molding excels at producing hollow parts with closely spaced parallel walls. Insulated food containers, ice chests, tote bins, boats, and cushioned shipping cases all rely on this technique. Most other plastic processes would produce these parts as two pieces, requiring assembly.

One problem associated with closely spaced parallel walls is providing enough volume in the cavity for the plastic material. Finely ground powdered plastic has a bulk density factor at least three times greater than the same material molded into a solid part. The distance between two parallel walls must provide enough volume for the powdered plastic, and enough space for the material to flow through the mold and uniformly coat the cavity walls.

The refuse container (Fig. 3) has more than enough volume in the cavity to accept the full charge of plastic powder. There are, however, powder flow problems in the closely spaced walls that form the pickup truck lifting hook recess and the handle.

The absolute minimum distance between two walls must be three times the nominal wall thickness for the efficient molding of good quality parts. A distance of five times the nominal wall thickness is desirable. The lifting hook recess, shown in Fig. 5, Section X-X, is relatively open and easy for the powdered plastic to reach and coat.

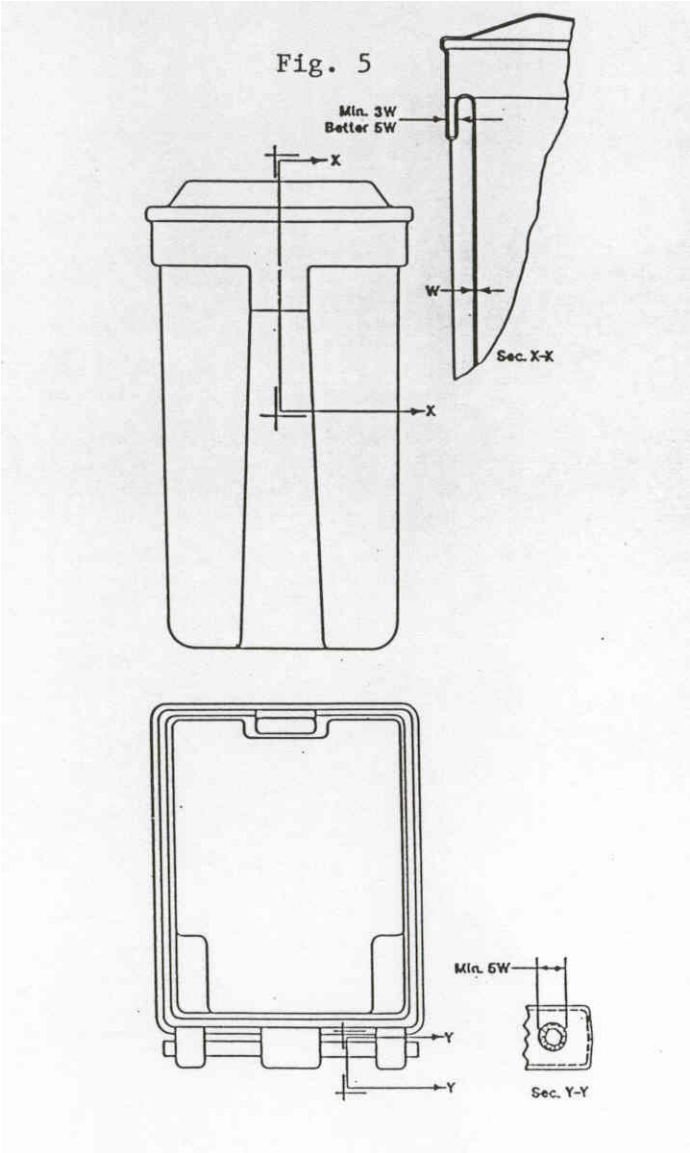

The handle, as shown in Fig. 5, Section y-y, is much more restrictive to powder flow. In structures of this type, the minimum distance between walls must be five times the nominal wall thickness.

Another consideration that affects the flow of the powder and wall thickness uniformity is the angle between two intersecting walls. As the angle between two walls becomes less than 90°, the open space between them is reduced (Fig.6). At a 45° angle, the two walls begin to act like closely spaced parallel walls. These converging walls violate the minimum allowable space between parallel walls before they meet at the corner of the part. This makes it difficult, or impossible, for the powdered plastic to uniformly coat the corner, which often contain thick sections, internal voids and sink marks.

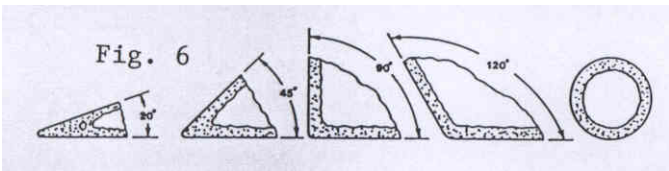

Nylon has been successfully molded into angles as small as 20°. PE and polyvinyl chloride (PVC) can have problems with angles of 30° or less. Polycarbonate (PC) is better with angles of 45° or greater. All the commonly moldable materials can accommodate a 90° or greater angle. The ideal shape for rotational molding would be a sphere, which has no corners at all.

In situations where a small angle is required, these problems can be minimized by keeping the extension short and providing the largest allowable radius at the corner where the two walls meet.

Angles of less than 45° accumulate more material than larger angles. The resulting thicker sections take longer to cool. The additional shrinkage in these thick corners contributes to molded-in stress and warpage.

Rotational molding excels in the production of large parts with relatively thin walls. In many instances, the process is capable of molding parts with walls too thin to satisfy the functional requirements. Increasing the wall thickness will produce a stronger part, but there are other ways of increasing strength. Crowning or doming a flat surface increases its stiffness. The most frequent technique for increasing the strength of a thin- walled part is the use of reinforcing ribs, or projections.

Rotational molding is not a good process for producing the common solid reinforcing ribs used by closed-molding techniques. This process is at its best while producing hollow ribs (Fig.4B).

The refuse container (Fig. 3) is rectangular in cross-section. The four flat side walls of the container are subject to an outward thrusting force when the container is filled to capacity. Adding vertical reinforcing ribs on these four walls would increase their ability to resist that force. Doming these surfaces inward or outward would also increase their stiffness.

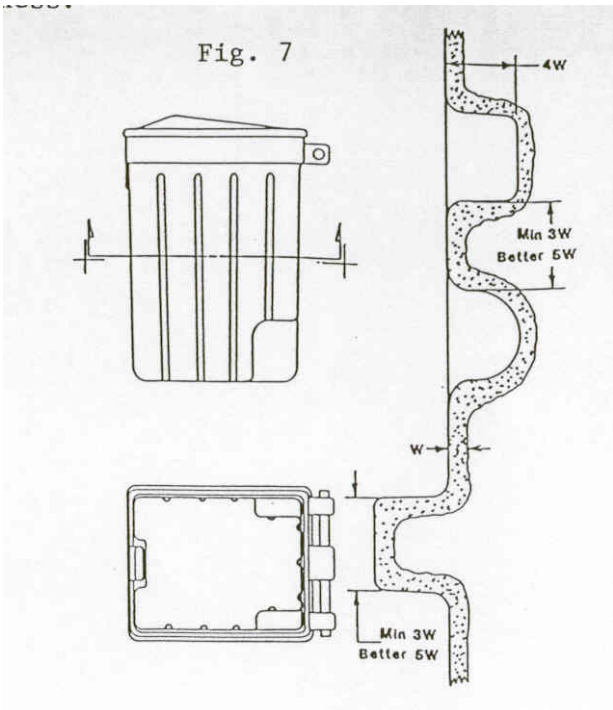

The shape of reinforcing ribs can be rounded or trapezoidal in cross-section (Fig. 7). The ribs should project above or below the nominal wall a distance of four times the nominal wall thickness, in order to provide a significant stiffening effect.

In some instances, additional strength can be provided by connecting two closely spaced parallel walls. This technique can convert two relatively weak walls into one integral box beam structure that is inherently strong (Fig. 8).

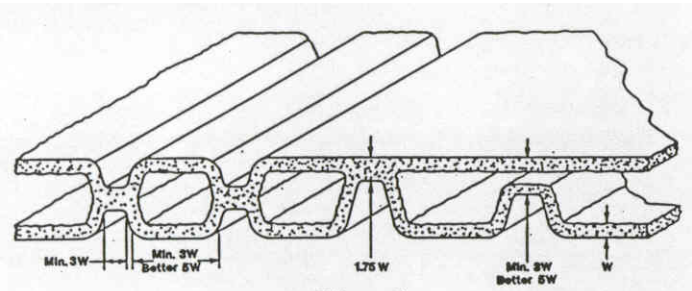

Fig. 8

These kiss-off ribs are most often elongated, but they can be any shape, with round being the second most frequently specified.

Kiss-off ribbing has been used in the bottom of double-walled tanks for products such as insulated ice-making machines. In these applications, the kiss-off strengthens the inner wall. Failures can develop at the edge of the kiss-off on tanks that hold liquids or products, such as grain, that act like liquids. These failures have been traced to the added strength at the kiss-off. The inner bottom wall of the tank between the kiss-offs bends under the load. Stresses build up at the junction between the weaker inner bot- tom wall and the stronger kiss-off. In some cases, a more durable tank has been produced with what is referred to as an "almost kiss-off". An almost kiss-off brings the inner and outer walls of the tank close together, but they are not attached to each other. As the inner wall is loaded, it bends and comes to rest on the almost kiss- off. This supports the inner wall, while leaving it free to move relative to the kiss-off. Kiss-off and almost kiss-off details are shown in Fig.8.

The rotational molding process is at its best producing hollow parts with smoothly blended contours. Providing radii on the corners of these parts has many benefits. The corners are frequently heavily loaded. Radii distribute these loads over a broader area, resulting in a stronger part. It is sometimes possible to produce a stronger, lower cost part by increasing the size of the radius while reducing the wall thickness. Larger corner radii improve the flow of the plastic powder through the sometimes complex contours of the cavity.

Rotationally molded parts are produced in open molds with no internal cores. Outside corners are free to pull away from the cavity as the part cools. The material in these corners is free to shrink, and these corners can be virtually free of stress. Some inside corners are formed over projections in the cavity. These projections prevent the material from shrinking the normal amount. Inside corners in these areas will contain molded-in residual stress. The larger these inside corner radii are, the lower the stress will be.

The recommended inside and outside corner radii for the commonly molded materials are listed in Table 3.

Table 3 Recommended Radius Size for Commonly Kolded Katerials

	Outside Radii		Inside Radii	
Plastic Material	Min. mm	Better mm	Min. mm	Better mm
FE	1.52	6.35	3.20	12.70
PP	6.35	12.70	6.35	19.05
PVC	2.03	6.35	3.20	9.53
Nylon	4.75	12.70	6.35	19.05
PC	6.35	19.05	3.20	12.70

Draft angles are tapers that are provided on those surfaces of a part that are perpendicular to the parting line of the mold. The function of draft angles is to improve the release of the part from the mold. Draft angles reduce the force applied to a part during demolding. The liberal use of draft angles can result in a lower part cost.

The recommended inside and outside surface draft angles for the commonly molded plastic materials are shown in Table 4. These draft angles have been found to be acceptable in the majority of cases, but bigger is better, and there are always exceptions.

Table 4 Recommended Draft Angles in Degrees per Side

	Inside Surfaces		Outside Surfaces	
Plastic Material	Min.	Better	Min.	Better
PE	1.0°	2.0°	0.0°	1.0°
PP	1.5°	3.0°	1.0°	1.5°
PVC	1.0°	3.0°	0.0°	1.5°
Nylon	1.5°	3.0°	1.0°	1.5°
PC	2.0°	4.0°	1.5°	2.0°

Textured surfaces require larger draft angles. Outside surfaces that shrink away from the cavity require the standard draft plus one degree. Inside surfaces that shrink onto projections in the cavity require the standard draft plus one additional degree for each 0.025 mm of texture depth.

Holes can be molded in, but rotational molding is not ideal for producing parts with holes through the wall. In spite of this limitation, techniques have been developed for molding holes through, into and onto rotationally molded parts. One of rotational molding's advantages is that molded-in holes do not contain the weld lines that weaken and distract from the appearance of holes produced by the melt flow processes such as injection, compression and structural foam molding.

Holes that project into a molded part are the easiest to produce. They are formed when the plastic coats inward projecting core pins. Outward projecting holes are more difficult to produce. The outward projecting, open and closed holes (Fig. 9-A and 9-B) are single-walled structures that cannot be produced by rotational molding.

An outward projecting open hole (Fig. 9-C) can be produced by molding a closed, hollow, tubular projection that is then cut to length after demolding.

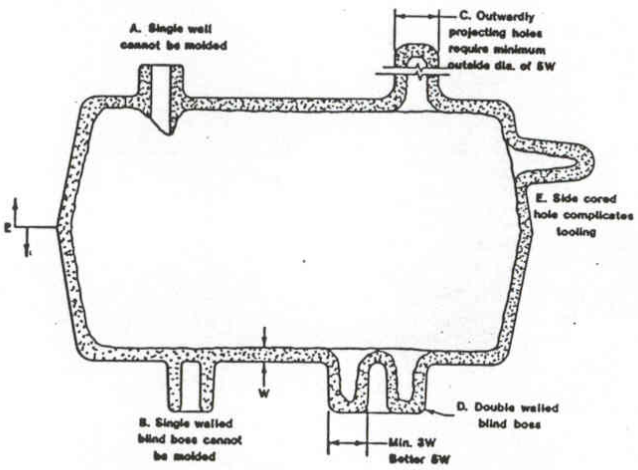

Fig. 9

An outward projecting, closed hole or blind boss, such as that shown in Fig. 9-B, is frequently used with threaded fasteners to locate and anchor a tank, or for the mounting of pumps or motors. If a blind boss is required on a rotationally molded part, it must be designed with enough space around the core pin to accommodate the flow of the plastic material. The open space for the plastic material must be a minimum of three, and preferably five times the part's nominal wall thickness.

The holes in Fig. 9-A through 9-D are in line with the opening of the mold. These holes can be provided with a simple two-piece mold. The outward extending tubular projection (Fig. 9-E) is troublesome. The location of this hole necessitates the use of a three-piece mold. The third part adds to the cost of the mold, and requires additional labor during the molding process.

It is common practice to machine holes into a molded part, but it is generally agreed that they should be molded in wherever it is practical to do so. Molded-in holes can reduce a part's cost by eliminating secondary operations. Molded holes are generally stronger than machined holes. Once the hole detail is located in a mold, its size and position are fixed. Machined holes are subject to the variations of the machining operations.

There are many other design details which must be considered in finalizing the design of a part that is to be rotationally molded. The basic design guidelines presented here are, however, the most important details to be considered.

Reference: An in-depth coverage of the information presented in this technical paper can be found in the author's 1998 book entitled **Rotational Molding -- Design, Materials, Tooling & Processing** published by Hanser/Gardner. That book is available from the Association of Rotational Molders 630/571-0611, and the Society of Plastics Engineers 203/775-0471.

Glenn Beall Plastics Limited

32981 N. River Road Libertyville, Illinois 60048-4259

Phone 847-549-9970 Fax 847-549-9935